INEEL ER Baseline Disposition Map (Page 1 of 4)

PREDECISIONAL DRAFT
This map is conceptual and in many cases does not represent cleanup or transfer decisions; this map does not preclude the on-going regulatory and stakeholder decision-making processes.

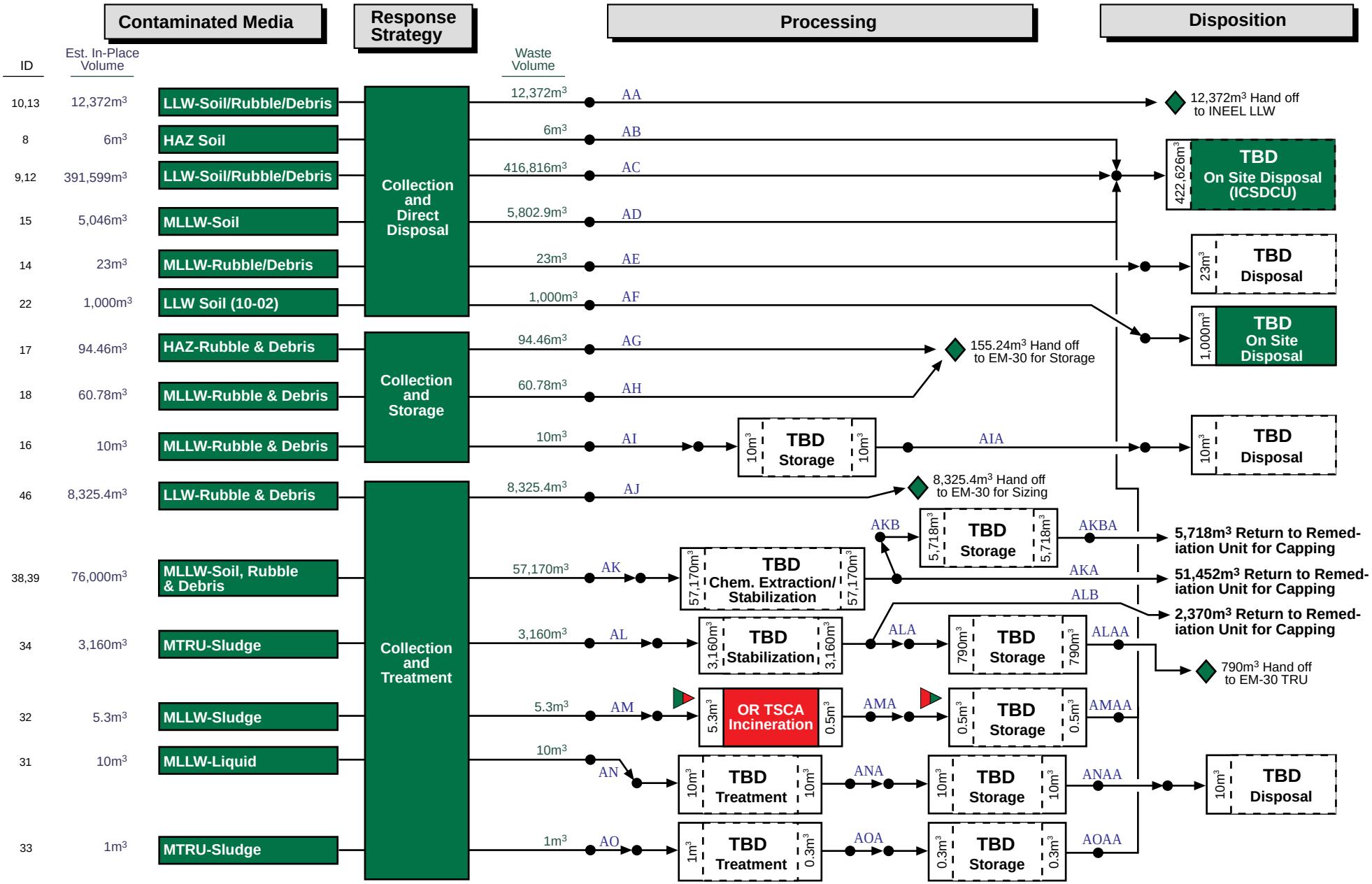

7-11.1

KEY: INEEL | OR | Fernald | RFETS | SNL | SRS | NTS | Hanford | WIPP | Offsite Comm. | Onsite Comm. | LANL | West Valley | SQS | Unknown | Intersite Interface: ▷ | On site Interface: ◇

Rev. 3.0
2/19/98

Letters in blue are link identifiers

INEEL ER Baseline Disposition Map (Page 2 of 4)

PREDECISIONAL DRAFT
This map is conceptual and in many cases does not represent cleanup or transfer decisions; this map does not preclude the on-going regulatory and stakeholder decision-making processes.

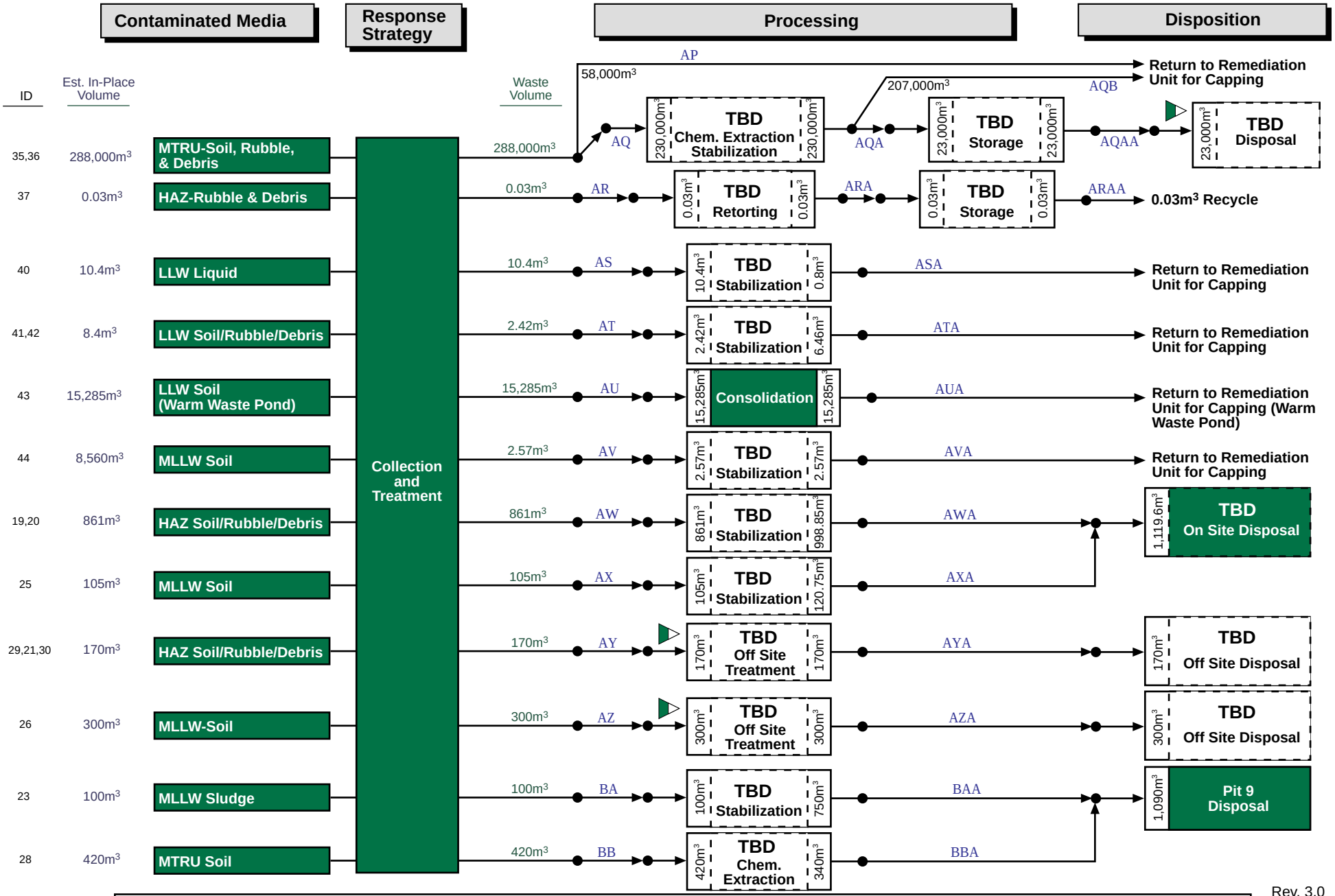

7-11.2

KEY: INEEL | OR | Fernald | RFETS | SNL | SRS | NTS | Hanford | WIPP | Offsite Comm. | Onsite Comm. | LANL | West Valley | SQS | Unknown | Intersite Interface: ▷ | On site Interface: ◇

Rev. 3.0
2/19/98

Letters in blue are link identifiers

INEEL ER Baseline Disposition Map (Page 3 of 4)

PREDECISIONAL DRAFT

This map is conceptual and in many cases does not represent cleanup or transfer decisions; this map does not preclude the on-going regulatory and stakeholder decision-making processes.

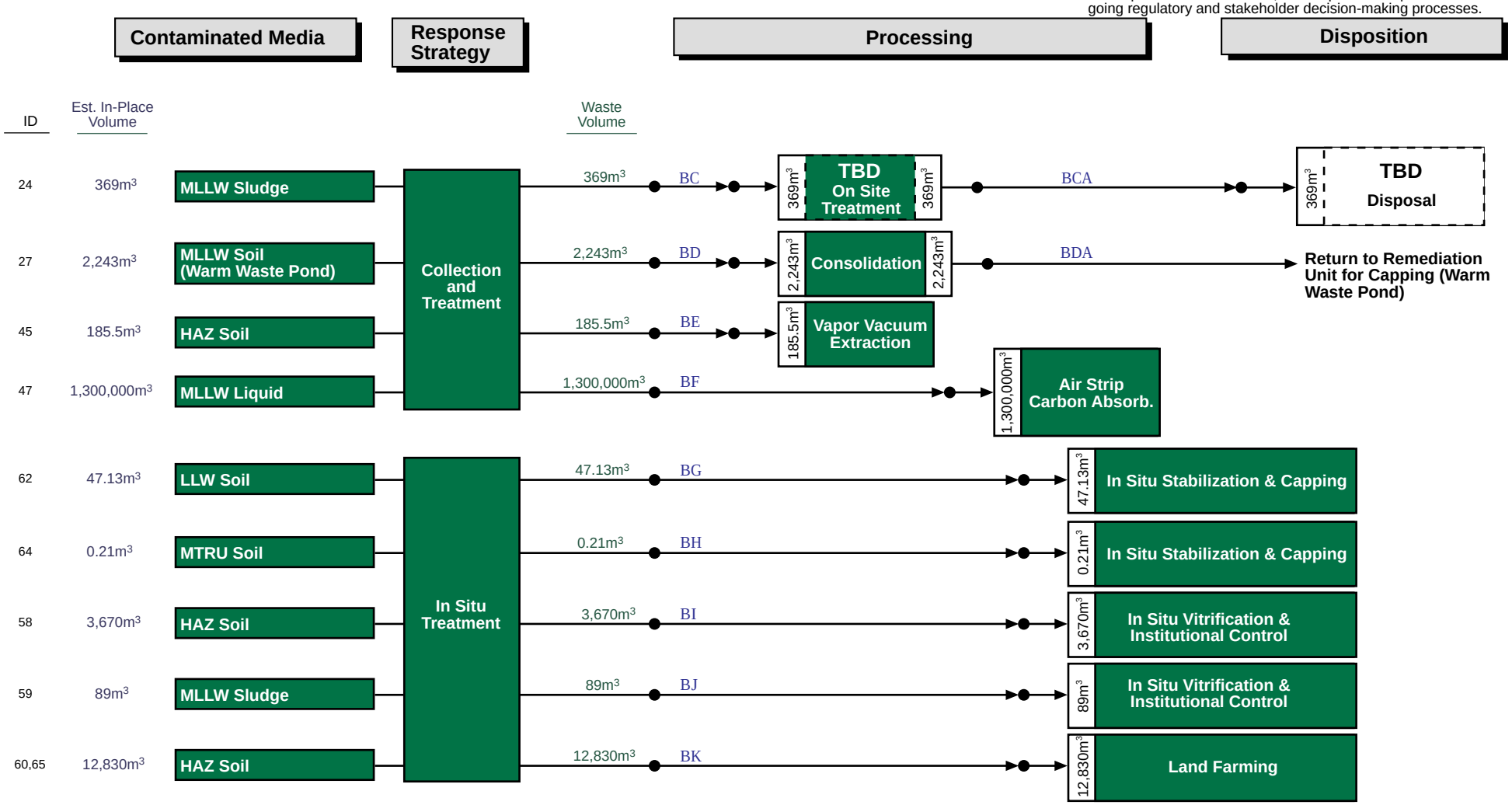

KEY: INEEL | OR | Fernald | RFETS | SNL | SRS | NTS | Hanford | WIPP | Offsite Comm. | Onsite Comm. | LANL | West Valley | SQS | Unknown | Intersite Interface: ▷ | On site Interface: ◇

Letters in blue are link identifiers

INEEL ER Baseline Disposition Map (Page 4 of 4)

PREDECISIONAL DRAFT

This map is conceptual and in many cases does not represent cleanup or transfer decisions; this map does not preclude the on-going regulatory and stakeholder decision-making processes.

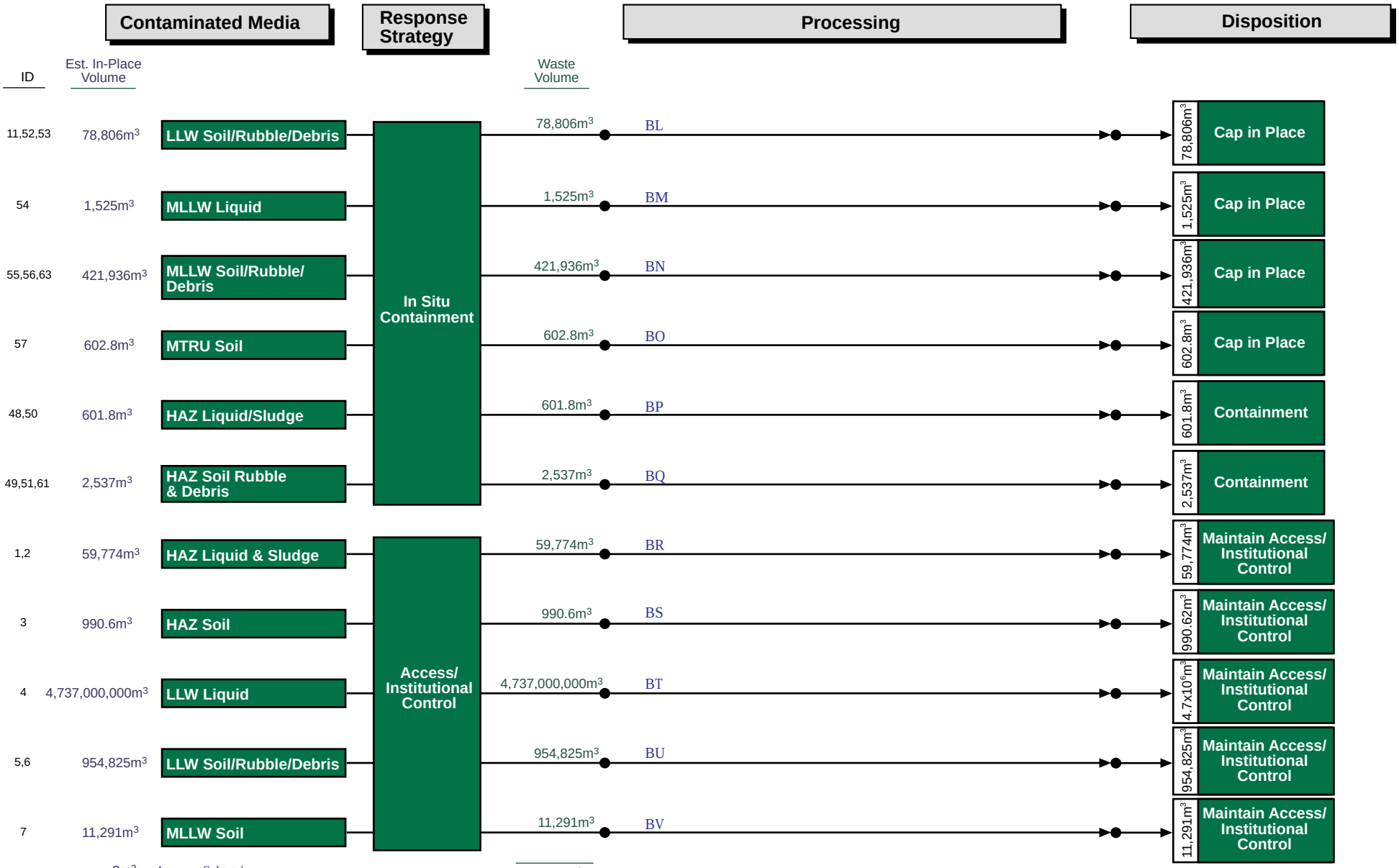

KEY: INEEL | OR | Fernald | RFETS | SNL | SRS | NTS | Hanford | WIPP | Offsite Comm. | Onsite Comm. | LANL | West Valley | SQS | Unknown | Intersite Interface: ▷ | On site Interface: ◇

Letters in blue are link identifiers

Rev. 3.0
2/19/98