INEEL MLLW Baseline Disposition Map (Page 1 of 3)

PREDECISIONAL DRAFT
This map is conceptual and in many cases does not represent cleanup or transfer decisions; this map does not preclude the on-going regulatory and stakeholder decision-making processes.

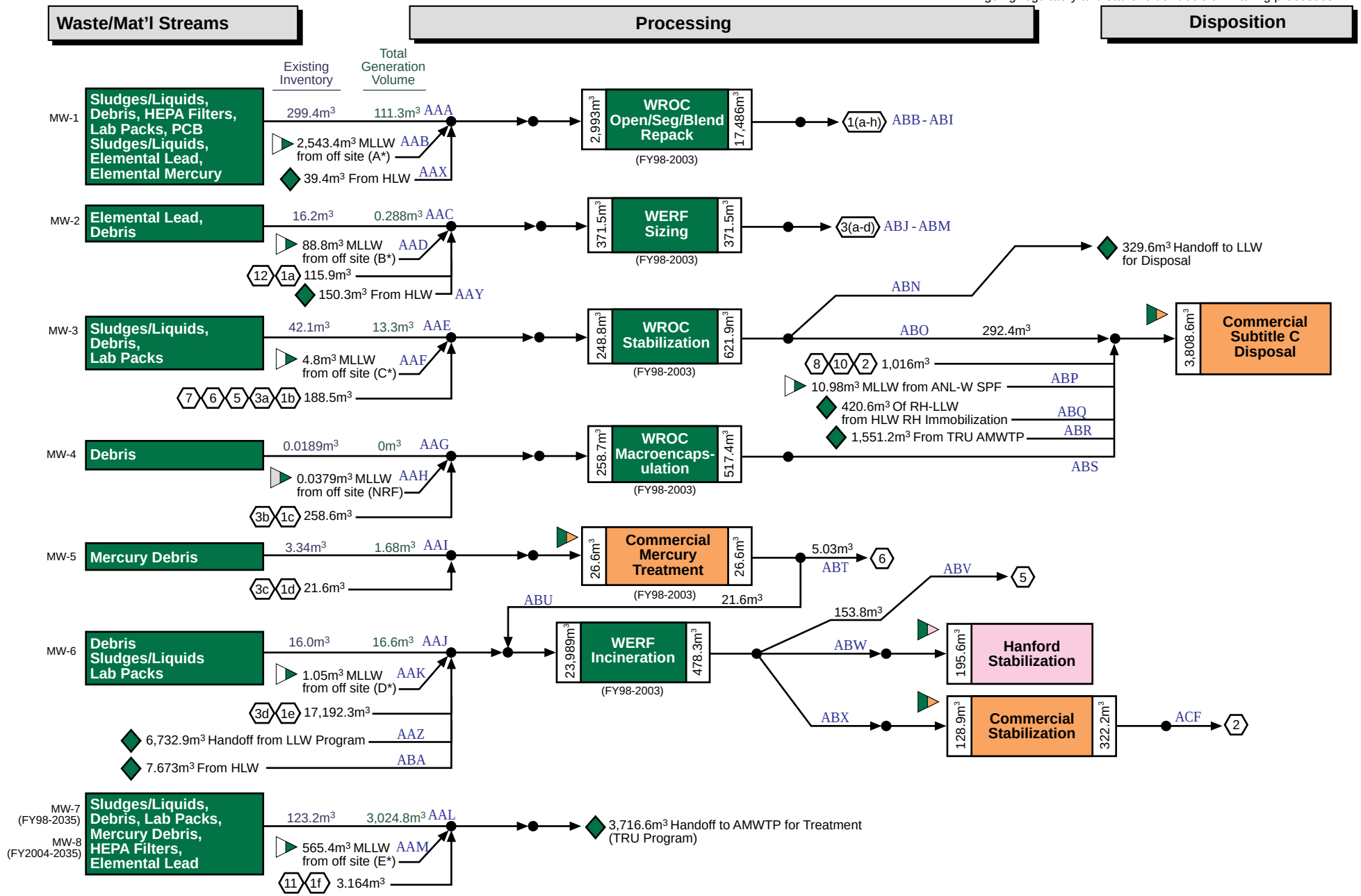

3-7.1

KEY: INEEL | OR | Fernald | RFETS | SNL | SRS | NTS | Hanford | WIPP | Offsite Comm. | Onsite Comm. | LANL | West Valley | SQS | Unknown | Intersite Interface: ▷ | On site Interface: ◇

Rev. 3.0
1/21/98

Letters in blue are link identifiers

INEEL MLLW Baseline Disposition Map (Page 2 of 3)

PREDECISIONAL DRAFT
This map is conceptual and in many cases does not represent cleanup or transfer decisions; this map does not preclude the on-going regulatory and stakeholder decision-making processes.

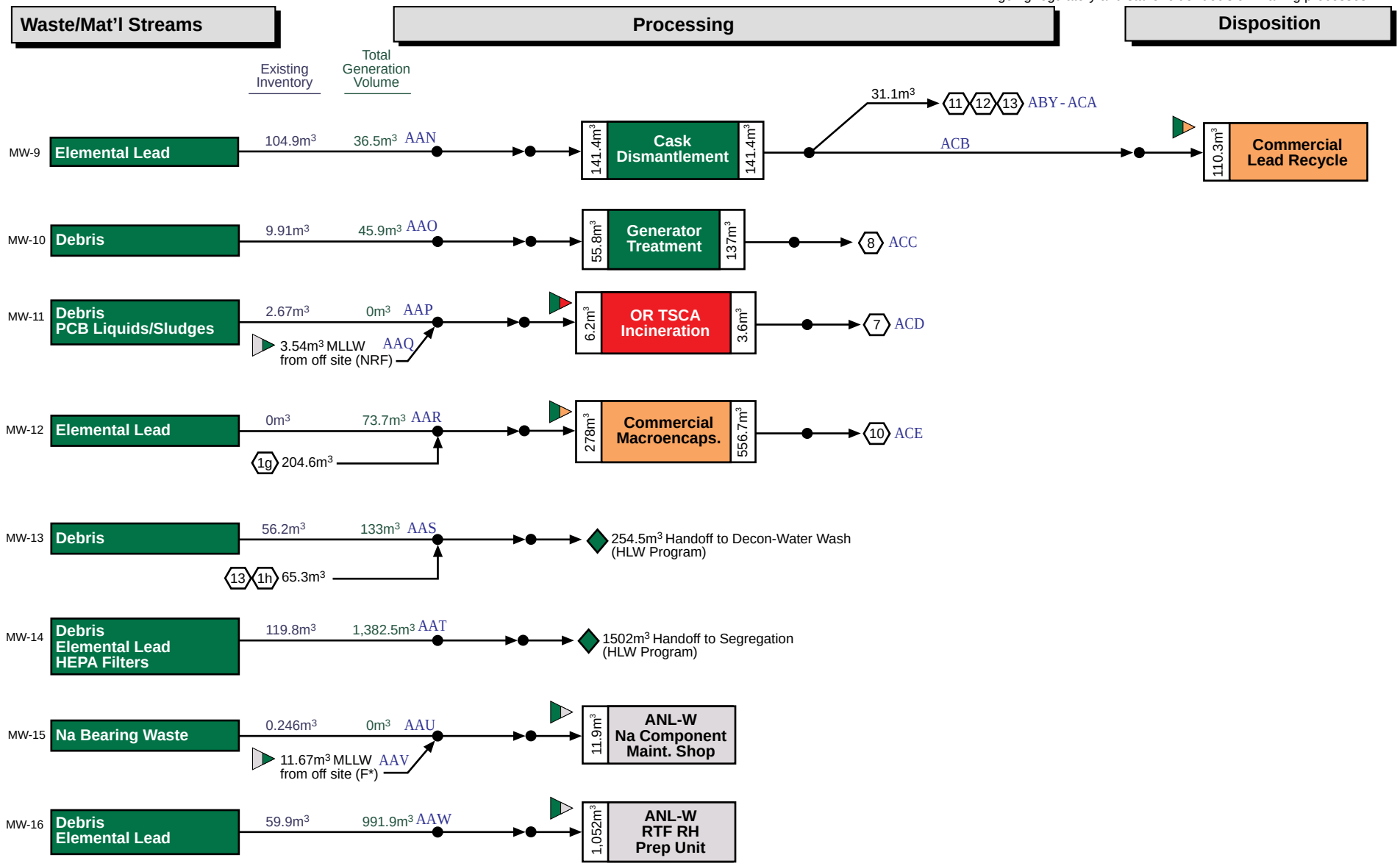

KEY: INEEL | OR | Fernald | RFETS | SNL | SRS | NTS | Hanford | WIPP | Offsite Comm. | Onsite Comm. | LANL | West Valley | SQS | Unknown | Intersite Interface: ▷ | On site Interface: ◇

Letters in blue are link identifiers

INEEL MLLW Baseline Disposition Map (Page 3 of 3)

Backup Documentation

PREDECISIONAL DRAFT
This map is conceptual and in many cases does not represent cleanup or transfer decisions; this map does not preclude the on-going regulatory and stakeholder decision-making processes.

The hexagon indicates a transfer within the map to reduce the number of lines.
The volumes shown below indicate the volume associated with each transfer.

1a	104.9m³	ABB	3c	3.29m³	ABL
1b	10.65m³	ABC	3d	134.2m³	ABM
1c	40.05m³	ABD	5	153.8m³	ABV
1d	18.32m³	ABE	6	5.031m³	ABT
1e	17,059m³	ABF	7	3.574m³	ACD
1f	0.092m³	ABG	8	137.1m³	ACC
1g	204.6m³	ABH	10	556.7m³	ACE
1h	48.37m³	ABI	11	3.072m³	ABY
2	322.2m³	ACF	12	11.07m³	ABZ
3a	15.46m³	ABJ	13	16.97m³	ACA
3b	218.6m³	ABK			

Detail of Off Site receipts to INEEL MLLW (in m³):

Stream A*

AE	12.32
ANL-W	5.9493
BT	1.6953
CN	0.4164
ET	16.692
GA	6.363
KA	4.5866
KK	2.2968
KW	2.7389
LA	117.22
LB	13.5738
LL	16.5471
MD	10.1
MI	7.2983
MU	3.40
NN	4.90
NRF	42.0354
PA	122.6116
PH	0.05
PN	0.024
PO	444.2840
PS	7.880
PX	50.69
RF	170.703
RL	1397.25
SA	67.1082
WS	10.63
WV	2.9877

Stream B*

ANL-W	0.1323
BT	0.8000
CN	1.3627
KA	1.4300
KK	0.5100
KW	0.5500
LA	38.4400
MI	10.7657
NN	1.9360
NRF	32.5525

Stream C*

ANL-W	1.4806
ET	1.5800
NRF	0.7240
SR	1.0000

Stream D*

ANL-W	0.0115
NRF	1.0402

Stream E*

BN	0.0350
BT	12.6510
ET	0.0002
KA	42.7090
KK	35.1110
KW	5.0300
LA	123.6760
LB	4.9461
LL	183.9200
MI	0.4164
NRF	2.8753
PO	9.5700
PS	8.1320
RF	135.4960
SR	0.8250

Stream F*

LA	6.1800
RP	5.4900

AE: Argonne National Laboratory-East
ANL-W: Argonne National Laboratory-West
BT: Bettis Atomic Power Laboratory
BN: Brookhaven National Laboratory
CN: Charleston Naval Shipyard
ET: Energy Technology Engineering Center
GA: General Atomics
KA: Knolls Atomic Power Laboratory-Schenect
KK: Knolls Atomic Power Laboratory-Kesselring
KW: Knolls Atomic Power Laboratory-Windsor
LA: Los Alamos National Laboratory
LB: Lawrence Berkeley Laboratory
LL: Lawrence Livermore National Laboratory
MD: Mound Plant
MI: Mare Island Naval Shipyard
MU: University of Missouri
NN: Norfolk Naval Shipyard
NRF: Naval Reactor Facility
PA: Paducah Gaseous Diffusion Plant
PH: Pearl Harbor Naval Shipyard
PN: Portsmouth Naval Shipyard
PO: Portsmouth Gaseous Diffusion Plant
PS: Puget Sound Naval Shipyard
PX: Pantex Plant
RF: Rocky Flats Plant
RL: Hanford Site
RP: Rensselaer Polytechnic Institute
SA: Sandia National Laboratory-New Mexico
SR: Savannah River Site
WS: Weldon Springs Site
WV: West Valley Demonstration Project

Rev. 3.0
1/21/98