LANL MLLW Baseline Disposition Map

PREDECISIONAL DRAFT
This map is conceptual and in many cases does not represent cleanup or transfer decisions; this map does not preclude the on-going regulatory and stakeholder decision-making processes.

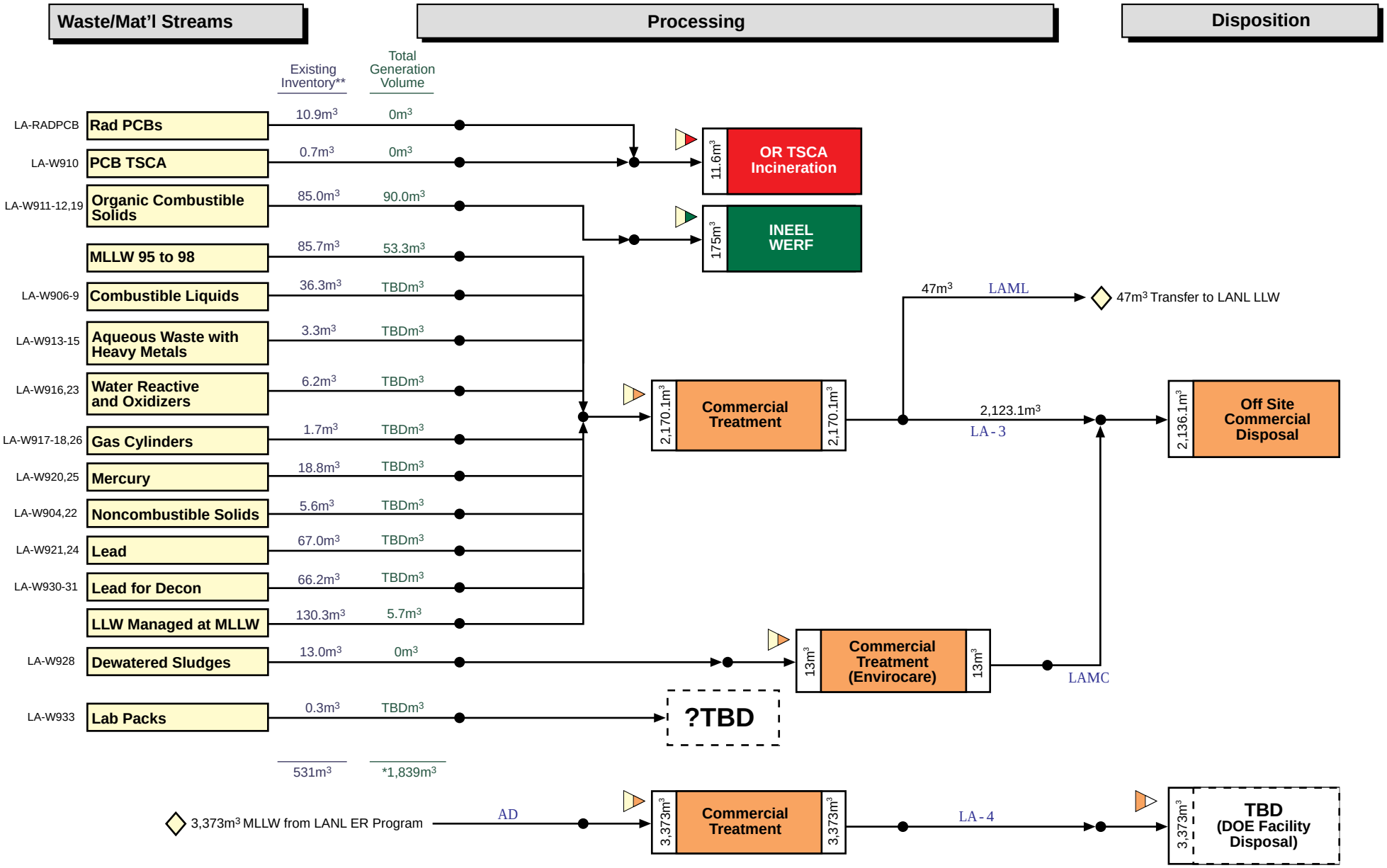

*Total generation=1,839m³, Can't break out into 11 components.
**As of revision 5 to LANL's STP (does not include newly generated in FY96 and FY97, about a total increase of 50m³.)

KEY: INEEL | OR | Fernald | RFETS | SNL | SRS | NTS | Hanford | WIPP | Offsite Comm. | Onsite Comm. | LANL | West Valley | SQS | Unknown | Intersite Interface: ▷ | On site Interface: ◇

Letters in blue are link identifiers