OR MLLW Baseline Disposition Map (Page 1 of 3)

PREDECISIONAL DRAFT
This map is conceptual and in many cases does not represent cleanup or transfer decisions; this map does not preclude the on-going regulatory and stakeholder decision-making processes.

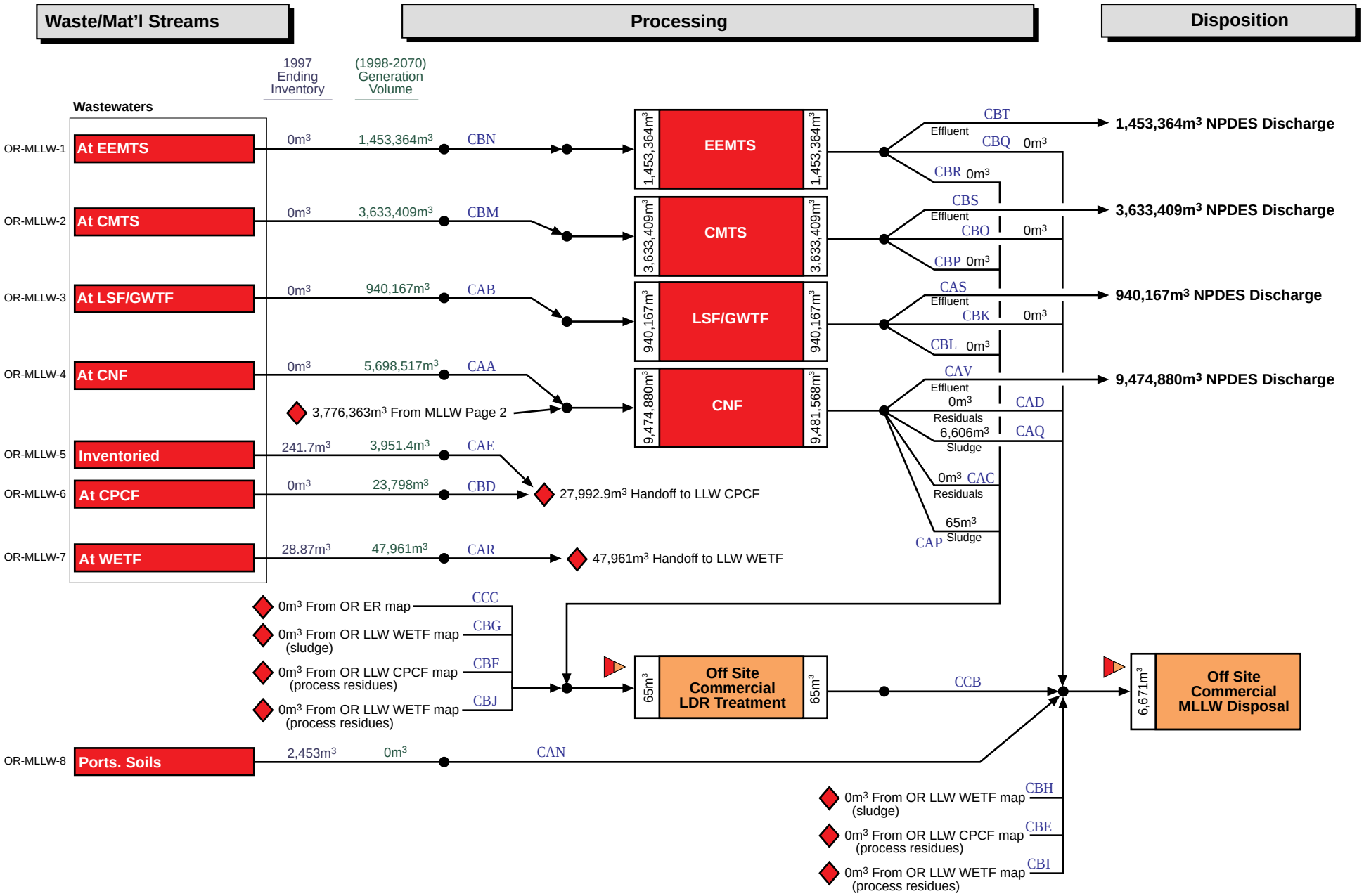

KEY: INEEL | OR | Fernald | RFETS | SNL | SRS | NTS | Hanford | WIPP | Offsite Comm. | Onsite Comm. | LANL | West Valley | SQS | Unknown | Intersite Interface: ▷ | On site Interface: ◇

Letters in blue are link identifiers

OR MLLW Baseline Disposition Map (Page 2 of 3)

PREDECISIONAL DRAFT
This map is conceptual and in many cases does not represent cleanup or transfer decisions; this map does not preclude the on-going regulatory and stakeholder decision-making processes.

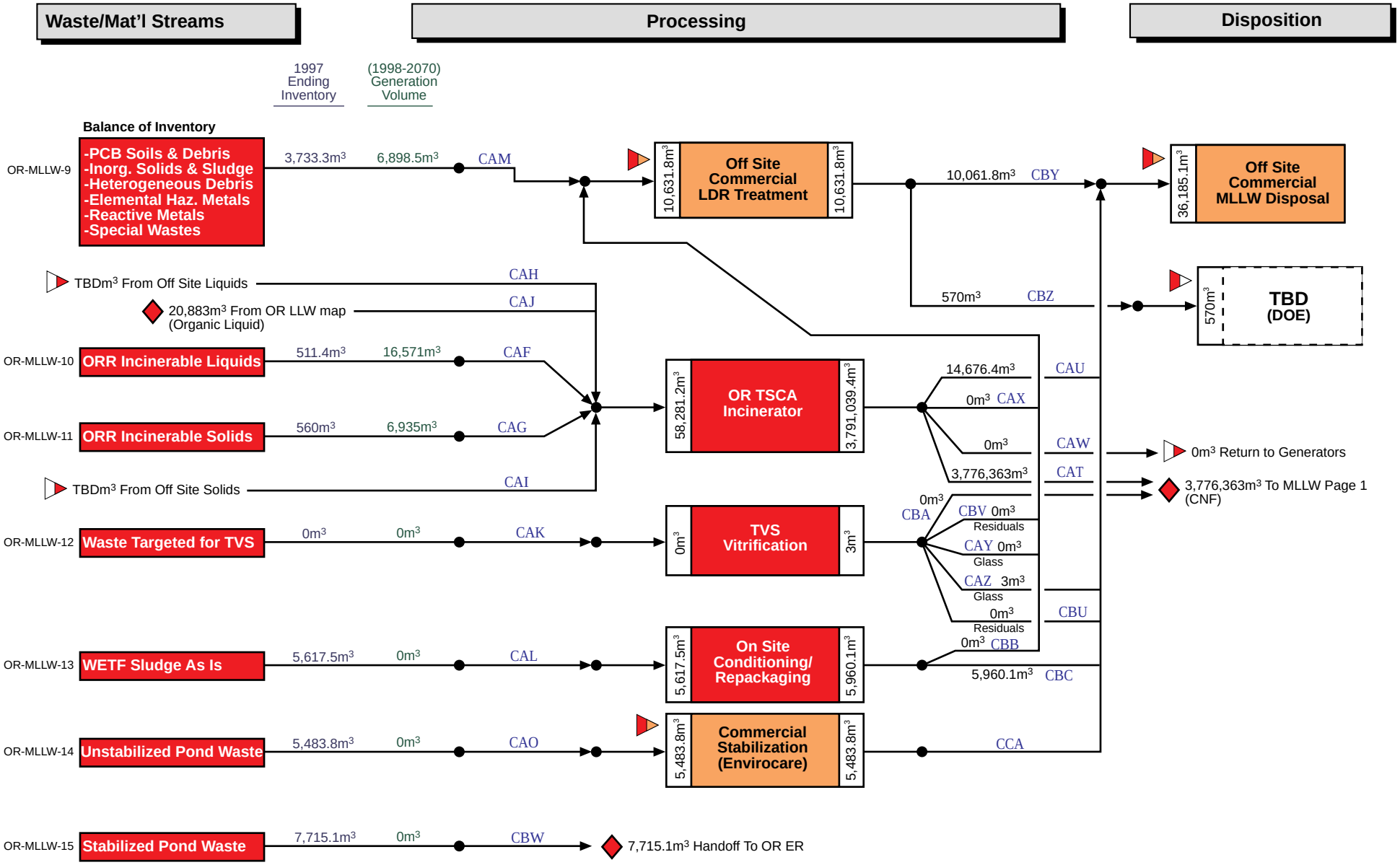

KEY: INEEL | OR | Fernald | RFETS | SNL | SRS | NTS | Hanford | WIPP | Offsite Comm. | Onsite Comm. | LANL | West Valley | SQS | Unknown | Intersite Interface: ▷ | On site Interface: ◇

Letters in blue are link identifiers

Rev. 3.0
2/19/98

OR MLLW Baseline Disposition Map (Page 3 of 3)

PREDECISIONAL DRAFT

This map is conceptual and in many cases does not represent cleanup or transfer decisions; this map does not preclude the on-going regulatory and stakeholder decision-making processes.

Generator Site	Liquid Volume, m^3	Solids Volume, m^3	Total Volume, m^3
Argonne National Laboratory	0.0	70.8	70.8
Brookhaven National Laboratory	0.8	2.4	3.2
Columbus Environmental Management Project	29.4	0.0	29.4
Energy Technology Engineering Center	TBD	TBD	TBD
Fernald	3,614.0	0.0	3,614.0
Hanford	0.0	0.0	0.0
Idaho National Engineering and Environmental Laboratory	0.0	6.2	6.2
Lawrence Berkeley National Laboratory	0.0	0.0	0.0
Lawrence Livermore National Laboratory	469.0	41.0	510.0
Los Alamos National Laboratory	11.1	0.48	11.58
Mound	0.76	0.42	1.18
Naval Reactors Program (multiple sites)	3.3	16.2	19.5
Nevada Test Site	1.25	0.10	1.35
Paducah Gaseous Diffusion Plant	420.0	1,045.0	1,465.0
Pantex	0.0	0.0	0.0
Portsmouth Gaseous Diffusion Plant	2,277.4	4,614.0	6,891.4
RMI	6.0	0.0	6.0
Rocky Flats Environmental Technology Site	127.0	17.0	144.0
Sandia National Laboratory	35.0	0.0	35.0
Savannah River Site	1.89	2.25	4.14
West Valley Demonstration Project	0.6	6.19	6.79
Weldon Spring Site Remedial Action Project	0.0	0.0	0.0
General Atomics	0.0	1.248	1.248
TOTALS	6,997.5	5,823.3	12,820.8